MUNK
GÜNZBURGER STEIGTECHNIK

Assembly and Usage Instructions
Platform ladder, folding and mobile

Item Numbers:
36325 - 36330
52305 - 52314
52705 - 52714

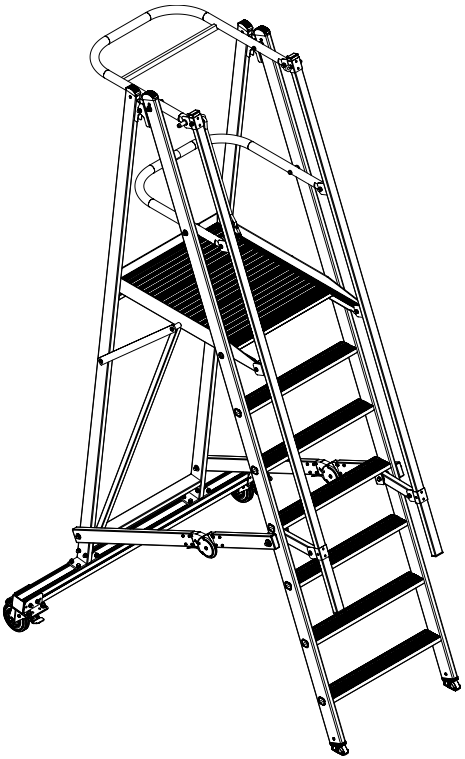

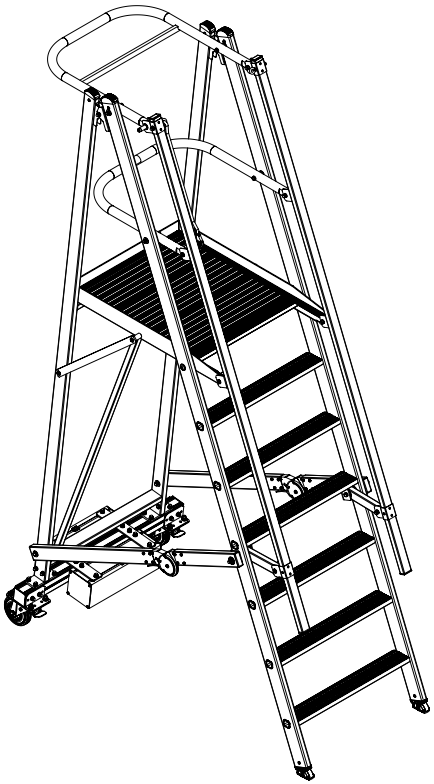

MUNK
GÜNZBURGER STEIGTECHNIK

Contents

Introduction 3
Intended Use 5
Technical Specifications 6
Check the contents of the package 7
Assembly 7
Ballast 8
Transport and Storage 9
Safety and User Instructions 9
Repair and Maintenance 13
Transport and Storage 15
Disposal 15
Inspection/Check Sheet for All Types of Ladders 16



WARNING

This warning indicates a hazard with a moderate level of risk that, if not avoided, could result in death or serious injury.



NOTE

“Note” refers to requirements and important information that must be given special attention.

Introduction

These assembly and usage instructions contain important information on the safe and proper handling of the ladder. Following these instructions will help you avoid hazards and extend the ladder's service life..

NOTE

Fllow these assembly and usage instructions! Anyone performing work with or on the ladder must have read and understood these instructions before use.

If you have any questions or need clarification, please contact the retailer or the manufacturer directly.

Warranty

The scope, duration, and form of the warranty are set forth in the Terms and Conditions of Sale and Delivery of MUNK GMBH.

For warranty claims, the installation and usage instructions in effect at the time of delivery shall always apply.

In addition to the Terms and Conditions of Sale and Delivery, the following applies:

No liability is assumed for personal injury or property damage resulting from one or more of the following causes:

- use not in accordance with the intended purpose,
- ignorance of or failure to follow these assembly and usage instructions,
- improper assembly and use of the product,
- repairs performed improperly,
- use of spare parts other than original ones
- use of the ladder with defective components,
- insufficiently qualified or inadequate installation and operating personnel,
- unauthorized structural modifications,
- disasters caused by foreign objects or force majeure.

The operator is responsible for ensuring that safety regulations are follo-

wed and that the equipment is used as intended.

MUNK GmbH Günzburg, 12.12.2025

Renovations and Modifications

In compliance with the legal requirements set forth in the Industrial Safety Regulation (BetrSichV), individuals with sufficient technical knowledge and skills may perform minor repairs on ladders and step stools.

Examples of this include:

- Replacing or installing ladder feet.
- Shortening the ladder if the end rails are damaged.

Major repairs should be performed by authorized service providers or the manufacturer.

Copyright

These assembly and usage instructions apply to all ladders whose part numbers are listed on the title page.

©2025 MUNK GMBH

All rights to this document are reserved by MUNK GMBH. This document may not be copied, reproduced, or translated, either in whole or in part, without the written permission of MUNK GMBH.

This document is intended for users of the product described and may only be passed on to the buyer upon resale of the ladder.

Subject to technical changes and errors. No claims regarding specific product characteristics may be derived from the contents of these assembly and usage instructions.

Intended Use

MUNK GMBH ladders comply with the DIN EN 131 series of standards.

Ladders that have been tested and certified for safety by an independent testing institute are identified by the certification seal.

Use the ladder only under the conditions described in this user manual. Any other use is considered improper.

Ladders for Professional Use

The use of ladders as elevated work platforms is permitted only in cases where, due to the low level of risk and the short duration of use, the use of other, safer work equipment would be disproportionate, and where the risk assessment concludes that the work can be performed safely.

In accordance with the EU Work Equipment Directive, the BetrSichV requires periodic inspections of work equipment, such as ladders, by a qualified inspector..

NOTE

DGUV-I 208-016
DGUV Information 208-016 provides guidance on the use of ladders and step stools (DGUV-I 208-016) and lists the provisions of the Occupational Safety and Health Act, the Occupational Safety and Health Ordinance (BetrSichV), the regulations of the employers' liability insurance associations, and the relevant standards that must be observed when providing and using ladders and step stools.

In accordance with the EU Work Equipment Directive, the BetrSichV requires that work equipment, such as ladders, be inspected on a recurring basis by a qualified inspector.

MUNK
GÜNZBURGER STEIGTECHNIK

Technical Specifications

All ladders listed here comply with the “professional use” ladder class as defined in DIN EN 131-2:2017.

The maximum load capacity of all ladders listed in these assembly and usage instructions is 150 kg.

Aluminum step ladder, foldable, on wheels							
Item Number	**52305**	**52306**	**52307**	**52308**	**52310**	**52312**	**52314**
Working height in meters	3,15	3,40	3,60	3,85	4,30	4,80	5,25
Platform height in meters	1,15	1,38	1,61	1,84	2,30	2,77	3,23
Truss width in meters	1,0	1,0	1,35	1,35	1,7	1,9	1,95
Number of steps, including the platform	5	6	7	8	10	12	14
Weight (approx.) in kg	29,0	30,0	33,0	35,0	38,0	45,0	47,0

Aluminum step ladder, foldable, mobile, with narrow base							
Item Number	**52705**	**52706**	**52707**	**52708**	**52710**	**52712**	**52714**
Working height in meters	3,15	3,40	3,60	3,85	4,30	4,80	5,25
Platform height in meters	1,15	1,38	1,61	1,84	2,30	2,77	3,23
Truss width in meters	0,85	0,85	0,85	0,85	0,99	0,99	0,99
Number of steps, including the platform	5	6	7	8	10	12	14
Weight of ballast in kg	30,0	50,0	60,0	80,0	100,0	150,0	160,0
Weight (approx.) in kg including ballast	67,0	89,0	103,0	125,0	149,0	205,0	218,0

Aluminum-FRP step ladder, foldable, mobile, with FRP handrail					
Item Number	**36325**	**36326**	**36327**	**36328**	**36330**
Working height in meters	3,15	3,40	3,60	3,85	4,30
Platform height in meters	1,15	1,38	1,61	1,84	2,30
Truss width in meters	1,0	1,0	1,35	1,35	1,7
Number of steps, including the platform	5	6	7	8	10
Weight (approx.) in kg	46,5	48,1	52,5	54,5	60,6

Check the contents of the package

The ladders are carefully packaged before shipment.

- Check the shipment immediately for damage.
- Report any damage to the shipping company right away.
- If any parts are missing, notify your dealer immediately..

WARNING

Choking Hazard
The packaging and the conductors are not toys. Playing with the packaging may pose a choking hazard.
Keep packaging out of the reach of children

- The packaging must be disposed of in accordance with applicable regulations and legal requirements.

Assembly

The crossbar is included in the scope of delivery..

1

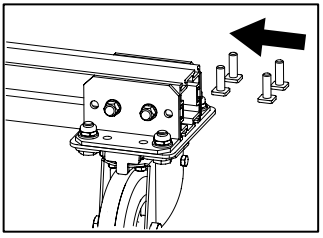

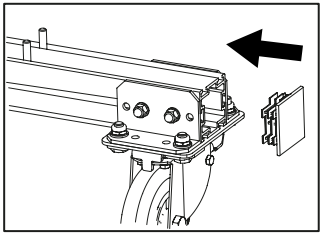

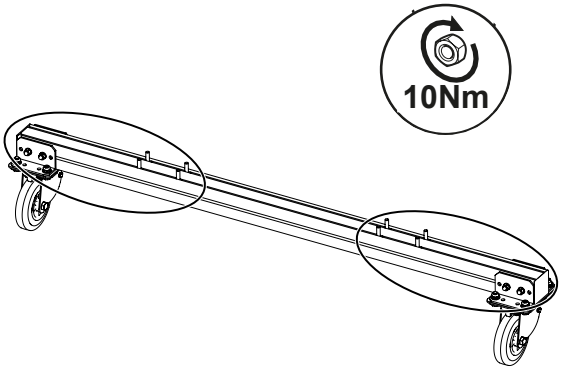

MUNK
GÜNZBURGER STEIGTECHNIK

2

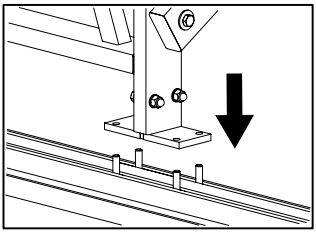

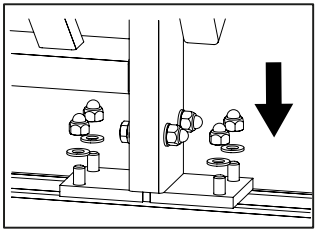

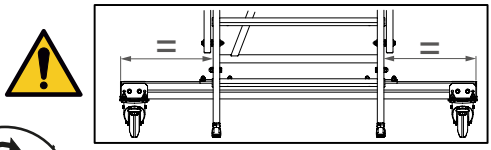



Ballast

The ballast weight is included in the scope of delivery.

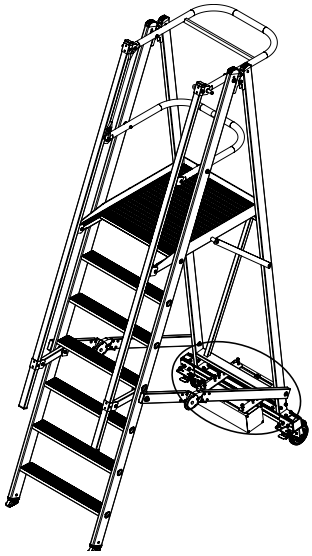

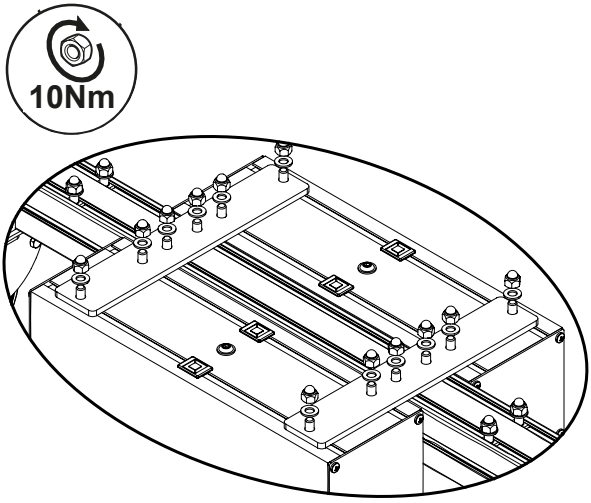

Transport and Storage

- Take care to handle the ladder properly during transport.
- Be mindful of the ladder's weight.
- Do not endanger yourself or others during transport.
- To prevent damage and deformation, store ladders in a dry place, protected from direct sunlight and the elements, on a level, clean surface or on suitable ladder racks.
- Ladders made of thermoplastic, thermoset plastic, or reinforced plastic—or containing these materials—should be stored out of direct sunlight (UV light).
- Wooden ladders should be stored in a dry place.
- Ladders should be stored where they cannot be damaged by vehicles, heavy objects, or dirt.
- When storing ladders, ensure that they do not pose a tripping hazard or an obstruction.
- Ladders should not be stored in easily accessible locations to limit their use for criminal purposes.

Safety and User Instructions

Safety



WARNING

Risk of Accident
Always be aware of potential risks when using the ladder.
The ladder must be suitable for the intended use.
Perform all work with and on the ladder in a way that minimizes risks as much as possible.



WARNING

Risk of Accident
If a ladder is set up permanently, make sure that it is not used by unauthorized persons (e.g., children).

MUNK
GÜNZBURGER STEIGTECHNIK

User Guidelines

According to DIN EN 131-3, the use of various types of ladders must be explained using symbols. Below, we explain the symbols we use and the minimum requirements for all types of ladders.

Symbols Used:

✓ = Permitted / Required Action

✗ = Not allowed / Warning

NOTE

Before using the ladder, carefully read the descriptions of the safety symbols.
The symbols shown here may be affixed to the ladders.

	Description	Symbol
1	Warning: Fall from a Ladder	
2	Follow the instructions	
3	Inspect the ladder after delivery. Before each use, visually inspect the ladder for damage and ensure it is safe to use. Do not use a damaged ladder.	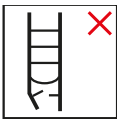
4	Maximum payload.	
5	Do not use the ladders on uneven or loose ground.	

	Description	Symbol
6	Avoid leaning out to the side.	
7	Do not place the ladder on a dirty surface.	
8	Maximum number of users	
9	Do not climb up or down the ladder while shifting your weight to one side.	
10	When climbing up or down a ladder or working on it, hold on tightly or take other safety precautions if this is not possible.	

	Description	Symbol
11	Do not climb the ladders while wearing inappropriate footwear.	
12	Avoid work that places lateral stress on ladders, such as drilling sideways through solid materials	
13	When using a ladder, do not wear any equipment that is heavy or bulky	
14	Do not use the ladder if you have physical limitations. Certain medical conditions, medication use, or alcohol or drug abuse can pose a safety hazard when using the ladder.	
15	Do not stay on the ladder for too long without taking breaks (fatigue is a risk).	
16	Prevent damage to the ladder during transport—for example, by securing it with straps—and ensure that the ladder is properly secured or mounted.	
17	Make sure the ladder is suitable for the intended use.	

	Description	Symbol
18	Do not use a ladder that is contaminated, for example, with wet paint, dirt, oil, or snow.	
19	Do not use the ladder outdoors in adverse weather conditions, such as strong winds.	
20	When using the product for professional purposes, a risk assessment must be conducted in accordance with the laws of the country where it is used.	
21	When positioning the ladder, be aware of the risk of collision, e.g., with pedestrians, vehicles, or doors. Lock doors (but not emergency exits) and windows in the work area, if possible.	
22	Identify all risks posed by electrical equipment in the work area, such as high-voltage overhead lines or other exposed electrical equipment, and do not use the conductors if there is a risk of electric shock.	
23	For unavoidable work on live electrical equipment, use non-conductive ladders.	

Description		Symbol
24	Die Leiter nicht als Überbrückung benutzen.	
25	Do not move the ladder while standing on it.	

Description		Symbol
26	When using outdoors, be mindful of the wind.	
27	Stabilizing crossbars must be attached to the ladder before it is used for the first time.	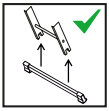

Additional Requirements and Safety Instructions for Step Ladders

Description		Symbol
1	Do not step off the side of the mobile step ladder onto another surface.	
2	Open fully before use (folding portable step ladders).	
3	Make sure the joints are locked.	
4	Do not enter areas marked in this way.	

Description		Symbol
5	Use only with a stabilizer (if part of the ladder)	
6	Use only with a ballast weight (if part of the ladder).	
7	Use only with the brakes engaged (when part of the ladder).	
8	Do not use ladders outdoors unless they are designed for that purpose.	

Repair and Maintenance

Ladders must be maintained regularly, depending on how often they are used and environmental conditions. This includes cleaning, checking the functionality of moving parts, and, if necessary, lubrication.

Cleaning

- Clean the ladders—especially all moving parts—as soon as possible after use if they appear dirty.
- Treat heavy soiling with warm water and commercially available cleaning agents, then dry the ladder with a clean cloth.

NOTE

Do not use cleaners containing solvents. Dispose of used cleaning agents in accordance with applicable environmental regulations.

Maintenance

Maintenance work may only be performed by qualified, authorized, and trained employees or by other contractors with comparable qualifications who are suitable for carrying out the maintenance work.

- Make sure that rungs, steps, step treads, or platforms are not contaminated with grease or oil. If this is the case, clean the contaminated areas immediately, e.g., with rubbing alcohol.
- If necessary, treat moving parts—such as hinges, anti-lift devices, or spring pins—with commercially available spray grease (e.g., HHS 2000).
- Oil must not be used for lubrication.

Repair

Perform repairs or part replacements in accordance with the manufacturer's specifications.

For ladders used for professional purposes, maintenance and repair work must be inspected by a person qualified to perform such inspections. This person must have acquired the necessary knowledge to perform this work, e.g., by participating in a manufacturer-sponsored training course.

Only original parts from the manufacturer may be used as accessories and replacement parts.

When repairing or replacing parts, such as feet, contact the manufacturer or dealer. If in doubt, have ladders repaired by specialized companies or the manufacturer..



NOTE

For repair instructions, see also:
https://www.munk-group.com/Downloads/Anleitungen/werkstattkarten.pdf

Transport and Storage

- Take care to handle the ladder properly during transport.
- Be mindful of the ladder's weight.
- Do not endanger yourself or others during transport.
- To prevent damage and deformation, store ladders in a dry place, protected from direct sunlight and the elements, on a level, clean surface or on suitable ladder racks.
- Ladders made of thermoplastic, thermoset plastic, or reinforced plastic—or containing these materials—should be stored out of direct sunlight (UV light).
- Wooden ladders should be stored in a dry place.
- Ladders should be stored where they cannot be damaged by vehicles, heavy objects, or dirt.
- When storing ladders, ensure that they do not pose a tripping hazard or an obstruction.
- Ladders should not be stored in easily accessible locations to limit their use for criminal purposes.

NOTE

The handrails must not be used to lift the ladder.

Disposal

- Once the ladder is no longer usable, it must be disposed of in accordance with applicable regulations.
- Since aluminum is a high-quality material, it should be sent for recycling.
- For detailed information, please contact your local municipality.

MUNK
GÜNZBURGER STEIGTECHNIK

Inspection/Check Sheet for All Types of Ladders

Inspection sheet for inspecting ladders and step stools in accordance with BetrSichV and DGUV Information 208-016 on the Use of Ladders and Step Stools (DGUV-I 208-016; formerly BGI 694).

The intervals between inspections depend primarily on the frequency of use, the stress placed on the equipment during use, and the frequency and severity of defects identified in previous inspections.

The results of this inspection must be documented.

Inventory No. _____

Location _____

Type of Ladder

- ☐ Folding Ladder
- ☐ Stepladder
- ☐ Rope Ladder
- ☐ Multipurpose ladder
- ☐ Platform
- ☐ Sliding Ladder
- ☐ Scaling Ladder
- ☐ Work stand
- ☐ Other ☐ _____

Material der Leiter

- ☐ Aluminium
- ☐ Plastic
- ☐ Steel
- ☐ Stainless steel
- ☐ Wood
- ☐ Plastic / Aluminum

Leaders' Information

Ladder Length/Height _____

Number of rungs / steps _____

Max. load _____

Features (e.g., EX version) _____

Certification Mark: (GS Certification / Type-Approved) ☐ yes ☐ no

MUNK
GÜNZBURGER STEIGTECHNIK

Data After a Repair

Ladder Length/Height _____

Number of rungs / steps _____

Manufacturer / Supplier _____

Order No. _____

Date of Purchase _____

Review of the acquisition by _____

Acknowledgment by the Responsible Persons _____

Note: _____

_____

_____

_____

_____

MUNK
GÜNZBURGER STEIGTECHNIK

List of parts to be inspected:

	1. Exam		2. Exam	
Evaluation Criteria	OK	not OK	OK	not OK
Rungs / Steps / Platform				
Deformation				
Damage (e.g., cracks) / Corrosion				
Relationships and Completeness				
Wear and tear (platform surface, tread)				
Sharp Edges / Splinters / Burrs				
Struts				
Deformation				
Damage (e.g., cracks) / Corrosion				
Sharp Edges / Splinters / Burrs				
Wear and tear				
Protective Coatings				
Fittings / Hinges / Latches / Fasteners / Rung Hooks / Rivets / Screws / Bolts				
Completeness / Fastening				
Damage (e.g., cracks) / Corrosion				
Wear and tear				
Secure fit				
Functionality				
Lubrication (Mechanical Parts)				
Ladder Feet / Casters / Foot Caps				
Secure Fit of the Fastener / Completeness				
Wear and Tear / Damage				
Functionality				
Corrosion				
Anti-spread device / Lock				
Mounting / Completeness				
Damage				
Corrosion				

		1. Exam		2. Exam	
Evaluation Criteria		OK	not OK	OK	not OK
Operational capability in a horizontal position					
Accessories					
Damage / Deformation					
Functionality					
Corrosion					
Sharp Edges / Splinters / Burrs					
General					
Conductor free of contaminants (e.g., dirt, paint, oil, or grease)					
Label present					
User Manual / Instruction Manual					
Result					
Ladder approved and suitable for use					
Repair needed					
Ladder locked					
Ladder checked	Date				
	Name				
	Signature				
Next Exam	Date				

MUNK
GÜNZBURGER STEIGTECHNIK

Safety. Made in Germany.

MUNK Günzburger Steigtechnik is a brand of the MUNK Group and is synonymous with premium quality for ladders, mobile scaffolding and special designs.



MUNK Günzburger Steigtechnik



MUNK Rettungstechnik

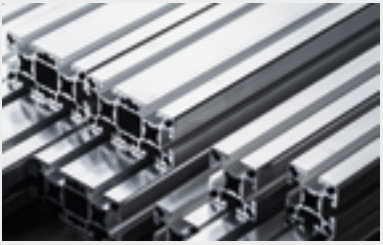

MUNK Profiltechnik



MUNK Service

MUNK GmbH | Rudolf-Diesel-Str. 23 | 89312 Günzburg
Tel +49 (0) 82 21 / 36 16-01 | Fax +49 (0) 82 21 / 36 16-80
info@munk-group.com | www.munk-group.com