MUNK
Sicherheit. Made in Germany.



Order no.: 120005

Mobile container power-light

Specification

Length 1.2 m	Width 800 mm	Height 1.19 m	Height up to top edge of platform 653 mm	Max. load capacity 500 kg
Castor diameter 200 mm	Braking system Standard	Number of levels 2	Transport dimensions (plus packaging) 1200 x 800 x 1180 mm, 80 kg	Business division MUNK Rettungstechnik
Order no. 120005				

Facts

- Mobile container with "standard" undercarriage
- Suitable for holding the following equipment items:
- Cable reels are included separately
- 1x DIN electrical generator 5 –14 kVA (max. size 820 x 400 mm)
- 2x cable reel 230 V
- 1x sheet metal fuel canister (10/20 l) including spout

- 1x telescopic tripod horizontal
- 1x telescopic tripod vertical
- Including 2x Euro container (600 x 400 x 220 mm) for holding additional accessories
- Pneumatic lamp pole (part no. 120105 /120205 / 120305) optionally available
- Further sizes and versions available on request
- Optionally also available with "Quadro" and "Quadro light" basic module
- Scope of delivery without equipment items
- Series production quality equipment
- Stable and durable construction made of high-strength aluminium sections
- Platforms made of weatherproof wooden platform boards
- Ergo-Glow-Grip control unit – Continuous handlebar, oval-shaped for intuitive operation. Photoluminescent controls charge via UV radiation – for full functionality and safety even in the dark
- Robust and smooth-running actuating mechanism via flexible Bowden cable
- Two ball bearing castors Ø 200 mm with central wheel slewing arrestor for optimum handling
- Two ball bearing fixed castors Ø 200 mm with drum brake and dead man's function, resistant to dust, moisture and oil
- Foot-operated parking brake

Scope of supply

- Mobile container: 1 x

More product pictures





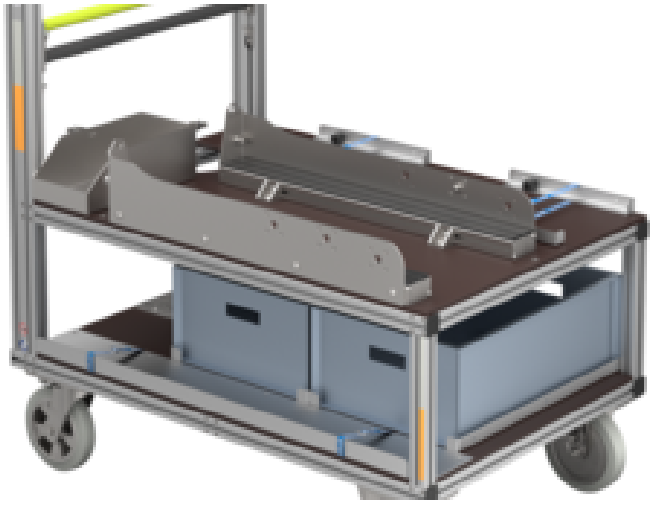

Added value

- The following equipment features are included as standard with every mobile container in the "Standard" assortment
- Body made of high-strength aluminium screw channel profile Connection of the profiles via stable, crossover corner screw connections – no welding!
- Markings for good visibility in the dark
- 2 fixed castors Ø 200 mm with internal drum brake and dead man's function
- 2 swivel castors Ø 200 mm with directional arrestors and central wheel and slewing arrestors
- Galvanised steel foot parking brake for swivel castors
- Operating control with ergonomic and continuous handle bars with SoftGrip coating
- Robust and smooth-running actuating mechanism via high-quality stainless steel Bowden cable

MUNK
Sicherheit. Made in Germany.

Corporate certifications

Standards for quality and sustainability

Nachhaltigkeit
EcoVadis
sustainable supply management
CSR-Rating in Silber 2022