MUNK
Sicherheit. Made in Germany.

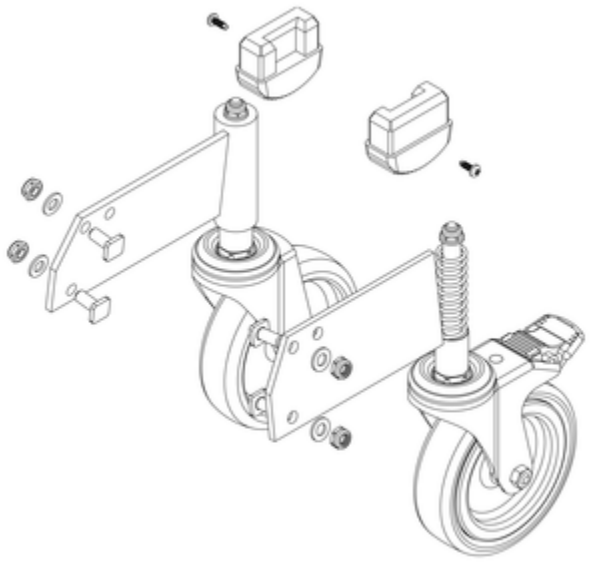

Order no.: 800025

Anti-static castor set ascent section

Specification

Transport dimensions (plus packaging) 300 x 300 x 150 mm, 3.2 kg	Business division MUNK Günzburger Steigtechnik	Order no. 800025	Spare part for article no. 050102	Spare part for article no. 054102
Spare part for article no. 050104	Spare part for article no. 050103			

Facts

- High-quality spare part suitable for products from MUNK Günzburger Steigtechnik
- Robust and durable design. Quality. Made in Germany.
- Easy to install, with all the necessary fasteners
- Durable and safe, developed according to the highest quality standards
- If you are unsure about the spare part: Please open the product details page for your base product and select the appropriate spare part from the spare parts list

Description

Our high-quality spare parts are specially developed to ensure the functionality and safety of our products in the long-term. Made from robust materials and manufactured to the highest quality standards, they offer the usual reliability that the MUNK brand stands for. The simple assembly and compatibility with the respective base products makes replacing quick and easy.

To find the right spare part, we recommend opening the product details page for the corresponding base product and using the spare parts list.

We reserve the right to make technical changes and price changes.

Rely on our proven quality: Safety. Made in Germany.

More product pictures

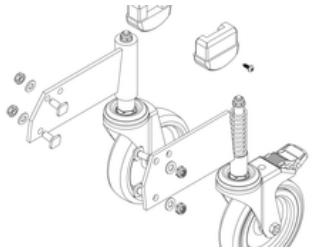

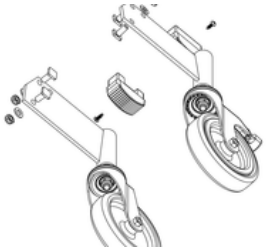

MUNK
Sicherheit. Made in Germany.

Corporate certifications

Standards for quality and sustainability

Nachhaltigkeit
EcoVadis
sustainable supply management
CSR-Rating in Silber 2022