MUNK
Sicherheit. Made in Germany.

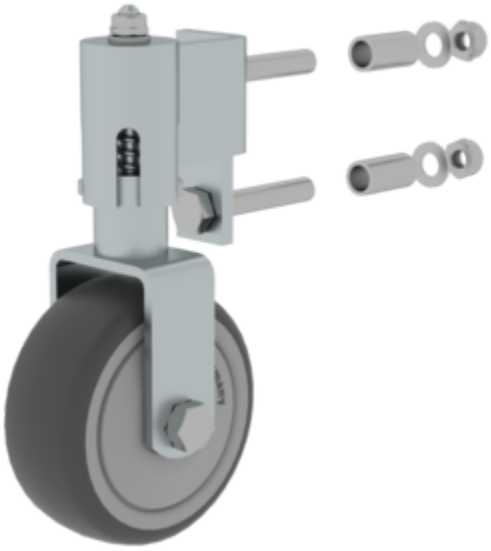

Order no.: 019782

Spring-loaded castor for shelf ladder

Design

left | right

Specification

Product type left	Inclination 0 °	Castor diameter 80 mm	Transport dimensions (plus packaging) 160 x 90 x 62 mm, 0.62 kg	Business division MUNK Günzburger Steigtechnik
Order no. 019782	Spare part for article no.	Spare part for article no. 044606	Spare part for article no. 044607	Spare part for article no. 044608
Spare part for article no. 044609	Spare part for article no. 044610	Spare part for article no. 044611	Spare part for article no. 044612	

Facts

- Essential accessories for flexible storage solutions
- Integrated spring mechanism for smooth rolling and simple positioning
- For shelf ladders
- Mounting hardware is not included in the scope of delivery

We reserve the right to make technical changes and price changes.

Scope of supply

- Spring-loaded castor: 1 x
- Assembly instructions and instructions for use: 1 x

More product pictures

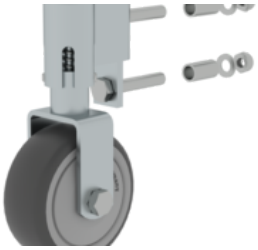

Added value

Industrial grade

Stable and robust for tough everyday working life (including 4-way edging)

- Corrosion-resistant fixtures
- Use of high-quality and high-strength materials
- Versatile and practical accessories



Versatile solutions

- Ladders available in standard lengths or individual dimensions
- Available with and without roll-top as well as a rotatable version
- Optional spring-loaded castors
- For single and double-sided shelves



Rail system

- Made-to-measure production of the rail system
- Easy assembly of all components



MUNK
Sicherheit. Made in Germany.

Corporate certifications

Standards for quality and sustainability

Nachhaltigkeit
EcoVadis
sustainable supply management
CSR-Rating in Silber 2022