MUNK
Sicherheit. Made in Germany.

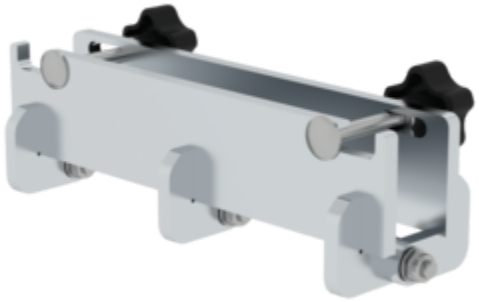

Order no.: 070369

Assembly aid, rung protection

Specification

Material	Transport dimensions (plus packaging)	Business division	Order no.
Aluminium	260 x 100 x 85 mm, 0.92 kg	MUNK Rettungstechnik	070369

Facts

- Assembly aid for rung protection
- For the professional installation of the Rungfix retrofit kit
- Suitable for all ladders compliant with DIN EN 1147 with rung protection
- Clearly illustrated assembly instructions are included
- Supplied without Rungfix

We reserve the right to make technical changes and price changes.

More product pictures

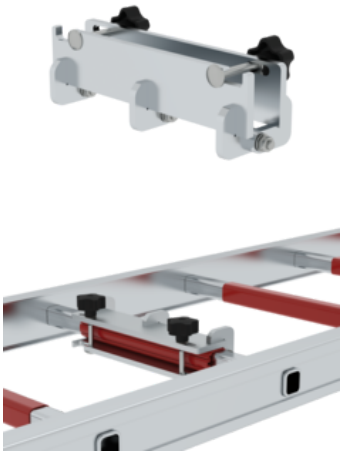

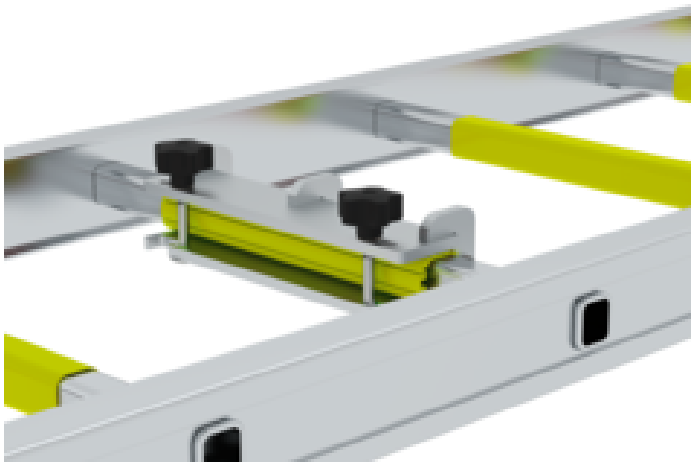

MUNK
Sicherheit. Made in Germany.

Corporate certifications

Standards for quality and sustainability

Nachhaltigkeit
EcoVadis
sustainable supply management
CSR-Rating in Silber 2022