MUNK
Sicherheit. Made in Germany.

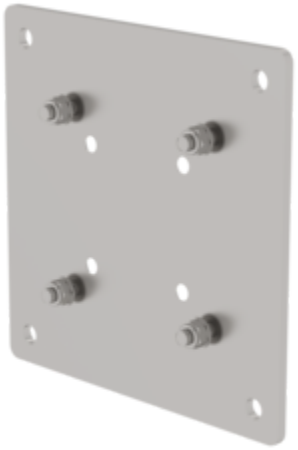

Order no.: 060948

Adapter plate

Material

Stainless steel | Hot-galvanised

Specification

Material	Transport dimensions (plus packaging)	Business division	Order no.
Stainless steel	300 x 300 x 35 mm, 5.76 kg	MUNK Günzburger Steigtechnik	060948

Facts

- The adapter plate is required for brick masonry to enlarge the wall plug distance and the screwing surface
- Suitable for wall anchor and spacer segment with 150 mm hole pattern
- L × W × H 300 × 300 × 8 mm, 5.7 kg

Scope of supply

- Adapter plate : 1 x
- Installation material: 1 x

More product pictures

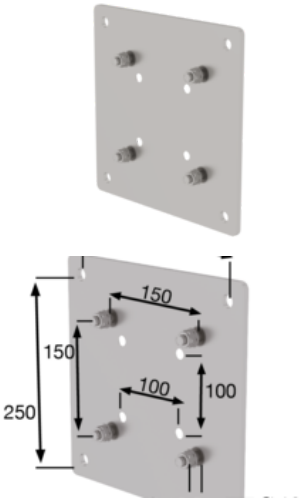

Added value

Optimum planning

- Practical planning aids (available as Downloads) with tips for correct planning of vertical ladder systems
- Planning in close coordination with the client as well as the place and purpose of use
- Joint project planning



MUNK
Sicherheit. Made in Germany.

Corporate certifications

Standards for quality and sustainability

Nachhaltigkeit
EcoVadis
sustainable supply management
CSR-Rating in Silber 2022